SERPAC Electronic Enclosures

SK3 (13X with compartment Seal Kit)

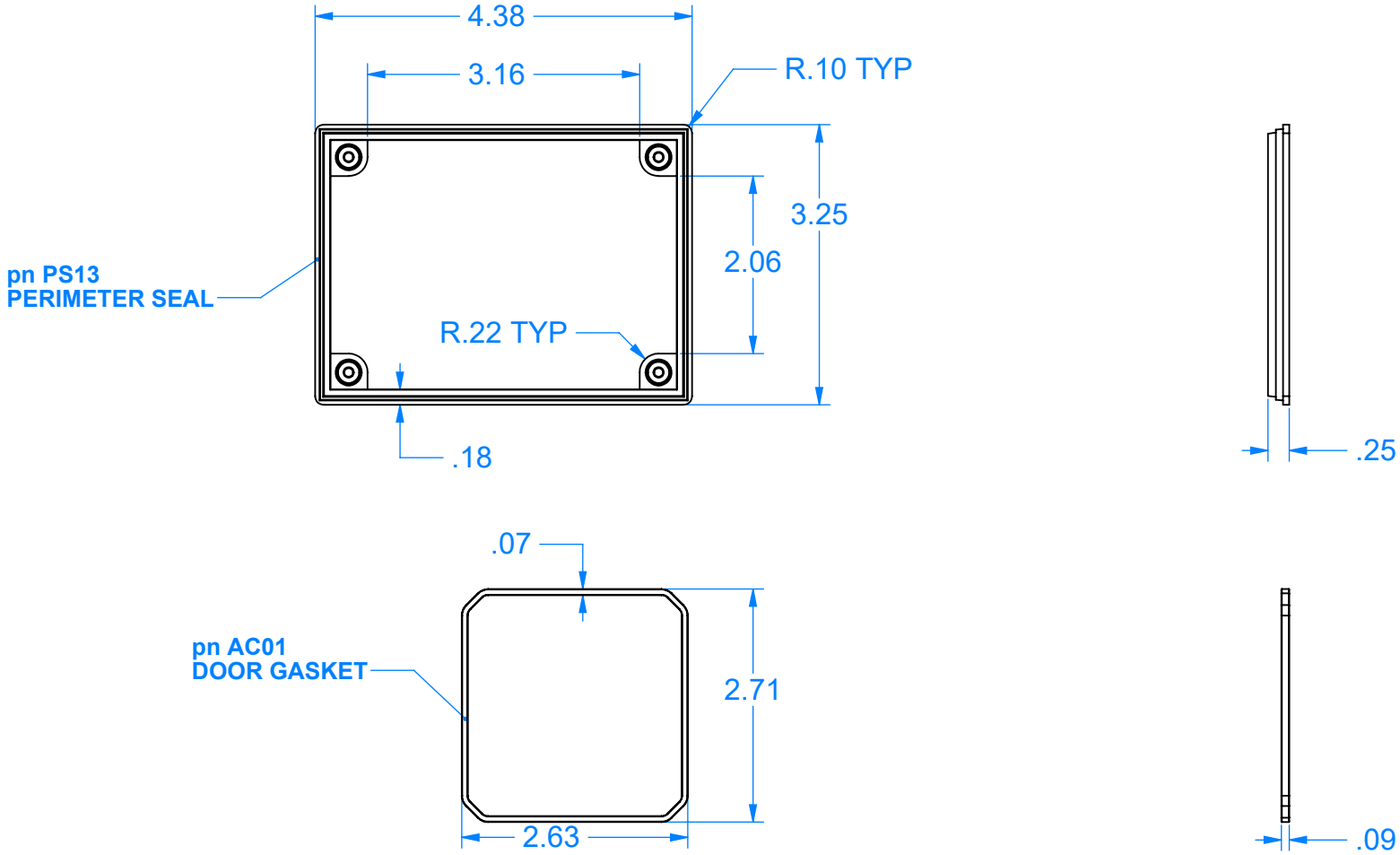

12/14/2021
2009 Wright Ave., La Verne, CA 91750
Ph. (626) 331-0517 Fx. (626) 331-8584 www.serpac.com